ICS-EMFS-DDD

Split-Type Flanged Electromagnetic Flow Meter · DN50 – DN800

±0.5 % | IP67 | Modbus RTU

The **ICS-EMFS-DDD** is an intelligent electromagnetic flowmeter. It measures conductive liquids, corrosive media such as strong acids, and liquid–solid suspensions such as mud, slurry and pulp. This flanged version with a remote transmitter is available in nominal diameters from DN50 to DN800 (2 to 32 in).



Flanged meter and remote transmitter · dimensions on pages 2–3

KEY FEATURES

- ✓ ±0.5 % accuracy over a 0.5 – 5 m/s velocity range
- ✓ No moving parts or obstructions — long life, no pressure loss
- ✓ Signal linear with flow velocity, unaffected by density or viscosity
- ✓ Bi-directional measurement with automatic cumulative totals
- ✓ Automatic instrument fault diagnosis and alarm

APPLICATIONS

Electric power · Water supply and drainage · Environmental protection · Metallurgy · Textile · Pharmaceutical · Paper

MEASUREMENT & OUTPUT

Nominal diameter	DN50 – DN800 (2 – 32 in)	Output / protocol	Modbus RTU (RS485)
Flow velocity	0.5 – 5 m/s (15 max.)	Power supply	110 V AC, 24 V DC, 12 V DC
Flow rate	By diameter, page 2	Power consumption	< 15 W
Accuracy	±0.5 %	Process temperature	–30 – +80 °C

CONSTRUCTION & RATINGS

Liner	Rubber, PTFE, PFA or F46	Sensor protection	IP67
Body material	Carbon steel	Transmitter protection	IP65
Electrode material	316L stainless steel	Transmitter material	Cast aluminum
Flange connection	Page 3; others on request	Flange pressure	0.6 – 1.6 MPa, by DN

ICS-EMFS-DDD

Flow Range & Transmitter Housing

Flow in m³/h | Dimensions in mm

FLOW RATE BY NOMINAL DIAMETER AND VELOCITY

DN	in	0.5 m/s	1 m/s	2 m/s	3 m/s	4 m/s	5 m/s	15 m/s max.
DN50	2	3.53	7.07	14.14	21.21	28.27	35.34	106.03
DN65	2.5	5.97	11.95	23.89	35.84	47.78	59.73	179.19
DN80	3	9.05	18.10	36.19	54.29	72.38	90.48	271.43
DN100	4	14.14	28.27	56.55	84.82	113.10	141.37	424.12
DN125	5	22.09	44.18	88.36	132.54	176.71	220.89	662.68
DN150	6	31.81	63.62	127.23	190.85	254.47	318.09	954.26
DN200	8	56.55	113.10	226.19	339.29	452.39	565.49	1696.46
DN250	10	88.36	176.71	353.43	530.14	706.86	883.57	2650.72
DN300	12	127.23	254.47	508.94	763.41	1017.88	1272.35	3817.04
DN350	14	173.18	346.36	692.72	1039.08	1385.44	1731.80	5195.41
DN400	16	226.19	452.39	904.78	1357.17	1809.56	2261.95	6785.84
DN450	18	286.28	572.56	1145.11	1717.67	2290.22	2862.78	8588.33
DN500	20	353.43	706.86	1413.72	2120.58	2827.43	3534.29	10602.88
DN600	24	508.94	1017.88	2035.75	3053.63	4071.50	5089.38	15268.14
DN700	28	692.72	1385.44	2770.88	4156.33	5541.77	6927.21	20781.64
DN800	32	904.78	1809.56	3619.11	5428.67	7238.23	9047.79	27143.36

Flow rate in m³/h at the flow velocity shown; 15 m/s is the maximum velocity.

TRANSMITTER HOUSING — SPLIT TYPE

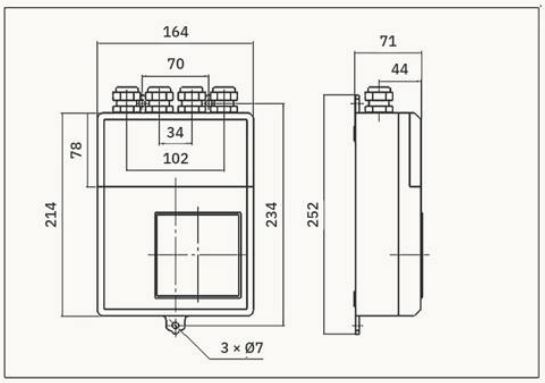

Transmitter wall mounted enclosure, front and side views

Housing width	164 mm
Housing height	214 mm
Overall height	252 mm
Depth	71 mm
Mounting holes	3 × Ø7 mm

ICS-EMFS-DDD

Flange Dimensions

All dimensions in mm

FLANGE DIMENSIONS BY NOMINAL DIAMETER

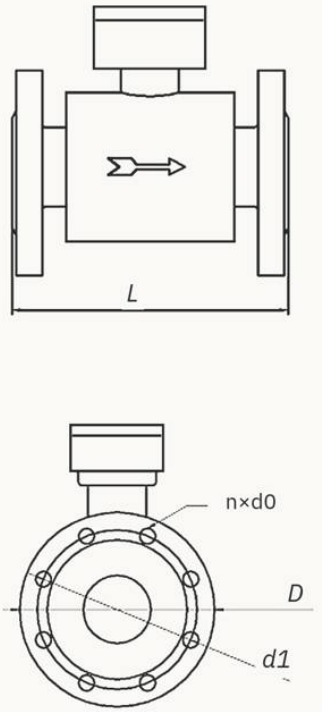

Flanged body, front and side views

DN	in	L, PTFE	L, rubber / PFA / F46	D	d1	n × d0	Rating, MPa
DN50	2	193	200	160	125	4 × Ø18	1.6
DN65	2.5	243	250	180	145	4 × Ø18	1.6
DN80	3	244	250	195	160	8 × Ø18	1.6
DN100	4	244	250	215	180	8 × Ø18	1.6
DN125	5	244	250	245	210	8 × Ø18	1.6
DN150	6	290	300	280	240	8 × Ø23	1.6
DN200	8	341	350	335	295	12 × Ø23	1.6
DN250	10	441	450	405	355	12 × Ø26	1.6
DN300	12	490	500	460	400	12 × Ø26	1.6
DN350	14	490	500	500	460	16 × Ø23	1.0
DN400	16	490	500	565	515	16 × Ø26	1.0
DN450	18	540	550	615	565	20 × Ø26	1.0
DN500	20	540	550	670	620	20 × Ø26	1.0
DN600	24	590	600	755	705	20 × Ø25	0.6
DN700	28	690	700	860	810	24 × Ø25	0.6
DN800	32	790	800	975	920	24 × Ø30	0.6

L face-to-face length · **D** flange outside diameter · **d1** bolt circle diameter · **n × d0** number and diameter of bolt holes.
Dimension tolerance ±2 mm. Other flange standards are available on request.
Rated flange pressure: DN50 – DN300 1.6 MPa, DN350 – DN500 1.0 MPa, DN600 – DN800 0.6 MPa.

HOW TO ORDER

CODE	MEANING	VALUES
EMFS	Product line	Flanged electromagnetic flowmeter, split type
DDD	Nominal diameter (mm)	050, 065, 080, 100, 125, 150, 200, 250, 300, 350, 400, 450, 500, 600, 700, 800

Example: **ICS-EMFS-250** = flanged electromagnetic flowmeter, DN250 (10 in).